Austral Lock
BY GAINSBOROUGH

Universal Multipoint Kits

Suitable for all door preparation templates, meaning you can use Austral Lock every time, with no change to setup

- Designed and manufactured in Australia
- Fit all industry standard cutouts for easy retrofitting
- Compatible with Austral Lock SD7, SD9, Elegance, Ultimate and Forge hinged and sliding security door locks (see overleaf)
- Contributes to AS 5039.2:2024 approved security screen door
- Available in rattle free, and easy to install cable kits or rod kits in standard or custom lengths
- Designed to match cutouts on other security multipoint products in the market
- Adjustable, retro fit rod kits are also available so you can go to the job, inspect, fit Austral Lock and the job's done in one visit!

MULTIPOINT LOCKING KIT CODES

DESCRIPTION	LOCK POSITION	AUSTRAL CODE	UNIVERSAL CODE
3 POINT LOCKING KIT FOR HINGED SECURITY LOCKS WITH PROJECTION BOLT Includes 2x projection remote locks, 2x cables, 2x faceplates, 2x strikes, connector boss and fixing screws	High	EKIT/H	EKIT/UH
	Low	EKIT/L	EKIT/UL
	Special	EKIT/SP	-
3 POINT LOCKING KIT FOR HINGED SECURITY LOCKS WITH HOOK BOLT Includes 2x projection remote locks, 2x cables, 2x faceplates, 2x strikes, connector boss and fixing screws	High	UKIT/H	UKIT/UH
	Low	UKIT/L	UKIT/UL
	Special	UKIT/SP	-
3 POINT HOOK LOCKING KIT FOR HINGED SECURITY LOCKS WITH HOOK BOLT Includes 2x hook remote locks, 2x cables, 2x faceplates, 2x strikes, connector boss and fixing screws	High	HD16PLUS/H	HD16PLUS/UH
	Low	HD16PLUS/L	HD16PLUS/UL
	Special	HD16PLUS/SP	-
3 POINT LOCKING KIT FOR SLIDING SECURITY LOCKS WITH HOOK BOLT Includes 2x projection remote locks, 2x cables, 2x faceplates, 2x strikes, connector boss and fixing screws	High	SD14PLUS/H	SD14PLUS/UH
	Low	SD14PLUS/L	SD14PLUS/UL
	Special	SD14PLUS/SP	-
3 POINT LOCKING KIT FOR SLIDING SECURITY LOCKS WITH HOOK BOLT Includes 2x projection remote locks, 2x rods, 2x strikes, connector boss and fixing screws	High	S14R/H	S14R/UH
	Low	S14R/L	S14R/UL
	Adjustable	S14R/A	-
	Special	S14R/SP	-
3 POINT LOCKING KIT FOR HINGED SECURITY LOCKS WITH PROJECTION BOLT Includes 2x projection remote locks, 2x rods, 2x strikes, connector boss and fixing screws	High	H14R/H	H14R/UH
	Low	H14R/L	H14R/UL
	Adjustable	H14R/A	-
	Special	H14R/SP	-

Door cutout dimensions

- Refer to these diagrams for ordering multipoint kits
- For all special length kits of SD14PLUS, EKIT, UKIT, S14R and H14R, A and B lengths to be provided by customer
- For HD16PLUS special length kits, C and D lengths to be provided by customer
- Refer to installation instructions for strike details

Item codes	Suffix	A	B
Universal High	/UH	679mm	830mm
Universal Low	/UL	828mm	681mm

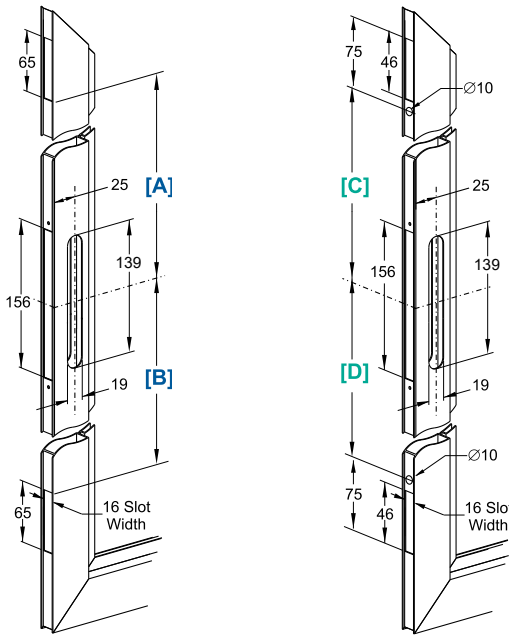

SCAN TO WATCH INSTALLATION VIDEO

Austral Lock
BY GAINSBOROUGH

THE FORGE FAMILY OF PRODUCTS

An evolutionary series of door furniture, designed with clean, modern lines for sliding and folding security screen and patio doors:

- All security products designed, tested and assembled in Australia
- Available in almost any Dulux® or Interpon® powdercoat colours
- All solutions come with interior snib lever for quick and convenient keyless locking
- Can be paired with Austral Lock's cable or rod multipoint kits to create an AS 5039.2:2024 approved security door (see overleaf)

SLIDING SECURITY LOCK

MORTICE BACKSET	25mm with overall depth of 43.5mm
DOOR THICKNESS	19-25mm
CONSTRUCTION	Zinc die cast, stainless steel face plate
ADDITIONAL FEATURES	Durability tested to 300,000 latching cycles* Stainless steel faceplate and catch plate Compatible with Austral Lock AA8 lazy cam Euro profile cylinders

CODES	FSS-BLST	Powdercoat Black
	FSS-WHGL	Powdercoat White
	FSS-MON	Powdercoat Monument
	FSS-SP	For other powdercoat colours

HINGED SECURITY HOOK BOLT LOCK

MORTICE BACKSET	25mm with overall depth of 35.5mm
DOOR THICKNESS	19-25mm
CONSTRUCTION	Zinc die cast, stainless steel face plate
ADDITIONAL FEATURES	Durability tested to 300,000 latching cycles* Stainless steel pivoting beak locking mechanism Jemmy resistant strike plate Compatible with Austral Lock AA8 lazy cam Euro profile cylinders

CODES	FHSP-BLST	Powdercoat Black
	FHSP-WHGL	Powdercoat White
	FHSP-MON	Powdercoat Monument
	FHSP-SP	For other powdercoat colours

HINGED SECURITY PROJECTION BOLT LOCK

MORTICE BACKSET	25mm with overall depth of 35.5mm
DOOR THICKNESS	19-25mm
CONSTRUCTION	Zinc die cast, stainless steel face plate
ADDITIONAL FEATURES	Durability tested to 500,000 latching cycles* Jemmy resistant strike plate Compatible with industry standard lazy cam Euro profile cylinders

CODES	FHSH-BLST	Powdercoat Black
	FHSH-WHGL	Powdercoat White
	FHSH-MON	Powdercoat Monument
	FHSH-SP	For other powdercoat colours

*Tested in accordance with AS 4145.2:2008

Have a technical query? Speak to our Technical Hub: 1300 898 596 | techsupport.au@allegion.com

Allegion (Australia) Pty Ltd
Freephone 1800 098 094
Freefax 1800 098 095
Email info.au@allegion.com
www.allegion.com.au

999AUF_UAMFOR REV A

©2026 ALLEGION
All rights reserved. No part of this document can be copied or used without permission

ALLEGION

June 2026